Parts in RED are available new
Parts in Black may be available used
Parts in Blue are rebuilt
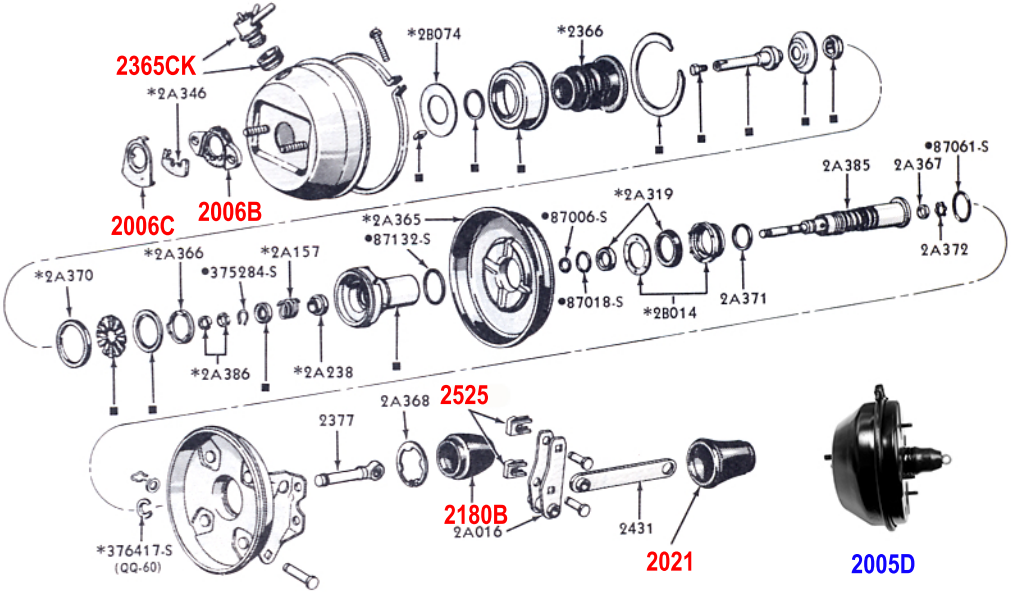
PDF56B